GARVATA AI

Backward Centrifugal EC Fan

CONFIGURATION DOCUMENT

Product Series: GarvataAI ECF

Model: GFAI.560T5.XXX

Document Version: v1.0

Operating Environment Requirements:

1) Operating Temperature: -25 to +60 degree Celsius
2) Operating Humidity: 5% ~ 95% RH
3) Storage Temperature: -25 to +80 degree Celsius
4) Storage Humidity: 5% ~ 95% RH

About Backward Centrifugal Fans:

The backward centrifugal fans work in a way that the air flow enters the blade space from the axial direction of the fan, and then rotates with the impeller under the drive of the impeller on the one hand; on the other hand, it increases the energy and leaves the impeller along the radius direction under the action of inertia, thus providing highly energy efficient and eco friendly operations.

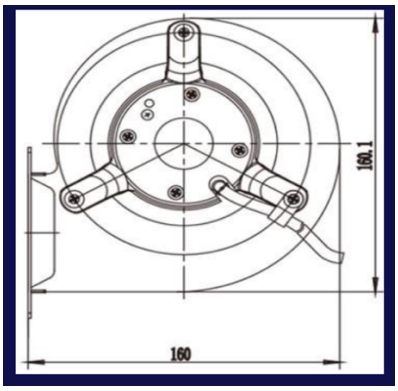

Product Nameplate Drawing:

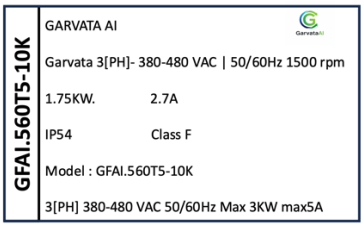

Dimension Drawings:

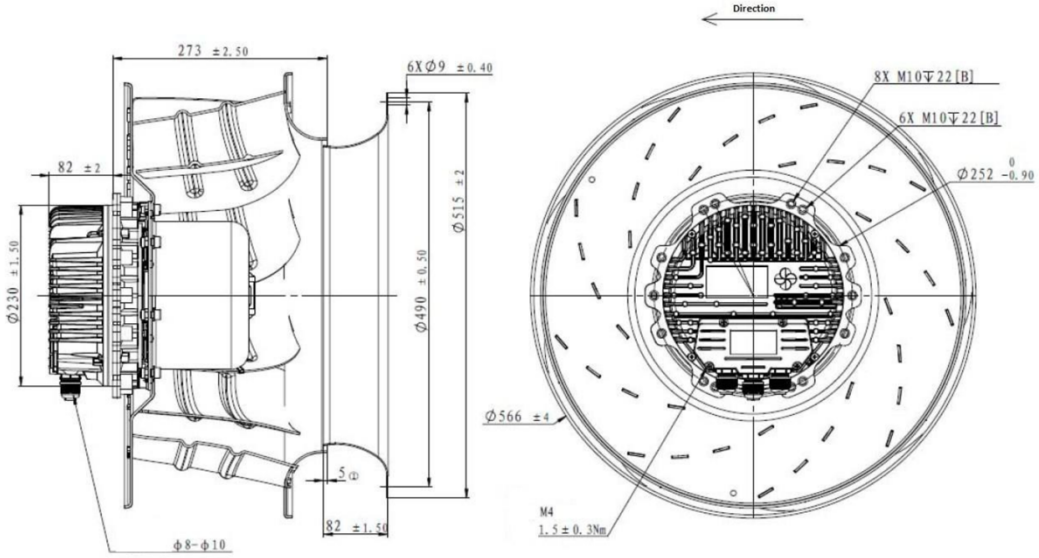

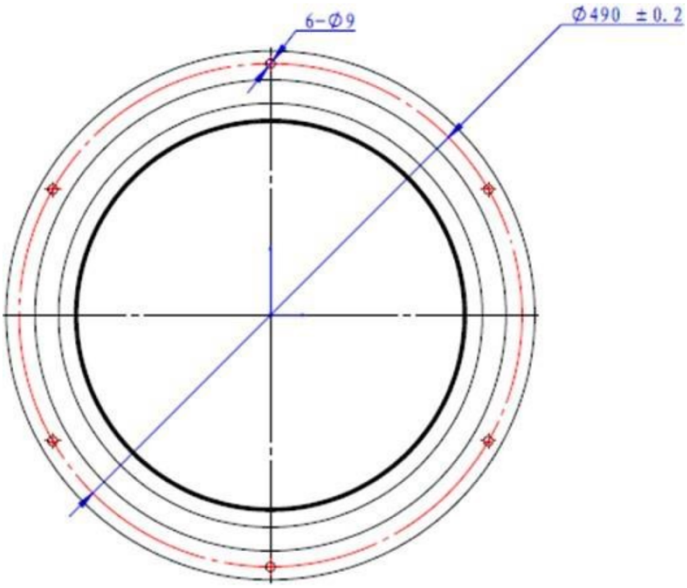

View Lead Connections:

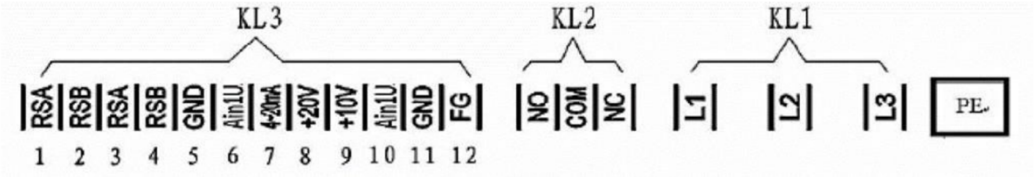

Lead Connection Details:

No	PIN	SIGNAL	Assignment/Function
KL3	1/3	RSA	RS485 [] RSA; BUS CONNECTION RS485; RSA; MODBUS RTU
KL3	2/4	RSB	RS485 [] RSB; BUS CONNECTION RS485; RSB; MODBUS RTU
KL3	5/11	GND	Signal Ground for Control Interface KL3
KL3	6/10	Ain1U	0~10V DC/PWM Control Input 0~10V DC/PWM; only useable as alternative to input 4~20mA
KL3	7	4~20mA	4~20mA Analog Control input 4~20mA; only useable as alternative to input 0~10V DC/PWM
KL3	8	+20V	+20V DC; Fixed Voltage Output 20VDC (+/- 2V max. 20mA). Power Supply for ext. devices (e.g. potentiometer)
KL3	9	+10V	+10V DC; Fixed Voltage Output 10VDC (+/- 1V max. 5mA). Power Supply for ext. devices (e.g. potentiometer)
KL3	12	FG	Speed Signal Feedback/Fault feedback
KL2	1	NO	The relay is normally Open, the fan is not powered and normally operation, open with COM. The fan is fail, closed with COM.
KL2	2	COM	Status relay, common connection; contact rating 250VAC/2A (AC1)
KL2	3	NC	The relay is normally closed, the fan is not powered and normally operation, closed with COM. The fan is fail, open with COM.
KL1	1	L1	3~380-480VAC; 50/60Hz; 10A~16A; Mains Supply Connection, Supply Voltage 3~380-480VAC; 50/60Hz; Customer need to use air switch or time-lag fuse 10A~16A
KL1	2	L2	
KL1	3	L3	
PE		PE	Earth connection, PE connection

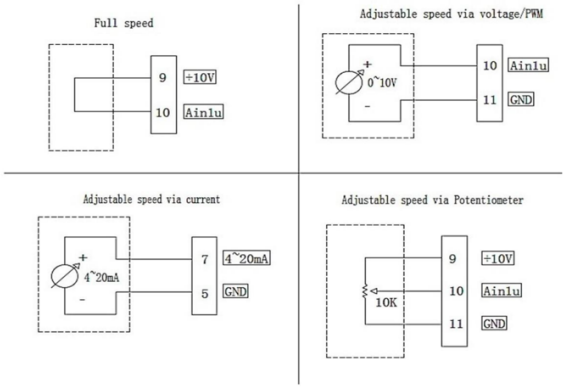

Lead Connection Details

Nominal Data	
Nominal Voltage	3~400 VAC
Voltage Range	380~480 VAC
Frequency	50/60Hz
Current Draw (+/- 10%)	2.85 A
Power Input (+/- 10%)	1520W
Speed (+/- 10%)	1500 rpm
Noise (-7, +3)	82db
Air Flow (+/- 10%)	12500 M3/h
Method of obtaining Data	Free air

Mechanical Data	
Motor	
Impeller	The leaves are made of aluminium alloy in a natural colour
Weight	40 kg
Motor degree of protection	IP55
Bearing Protection	Ball Bearing
Vibration	3.5mm/s
Balancing	650±10%r/min. When the fan is running at 1650±10%r/min, the dynamic balance accuracy of each end side is not lower than the balance quality grade G6.3.

Parameter at maximum efficiency point

PST	699 Pa
Power Input	3029 W
Air Flow	11500 m3/h
Speed	1501 rpm

Electrical Description	
Insulation Class	F
Protection Class	Protection class I (with customer connection of ground protection)
Touch Current	≤ 10 mA (GB4706.32-2012)

Performance Curve – QP

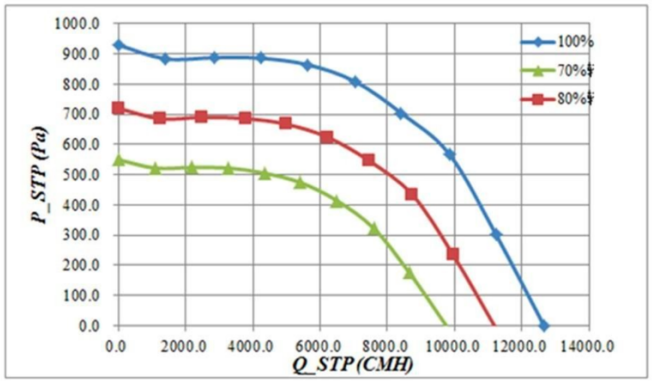

Performance Curve – WQ

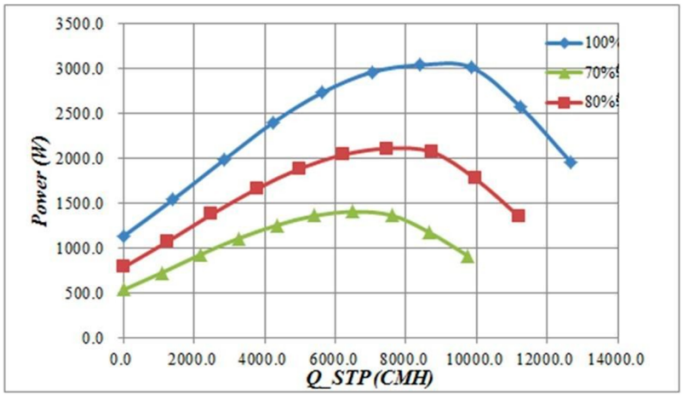

Safety Compliance

1) IP 55 Rating
2) IEEE 519 Norms Comply for No Harmonics
3) Flameproof for Zone 2

Installation Description

Performance Curve – Specification

VAC	F Hz	IA	PW	N r/min	PTS pa	QV CMH	PTS in-H2O	QV CFM
400	50	3.5	1941	1505	0	12622	0	7434
400	50	5.0	3029	1501	699	8445	2.8	4973
400	50	4.0	2369	1504	877	4204	3.5	2476
400	50	1.9	1110	1512	918	0	3.7	0
400	50	2.3	1354	1336	0	11203	0	6598
400	50	3.6	2112	1330	546	7461	2.2	4394
400	50	2.8	1662	1330	686	3775	2.8	2223
400	50	1.4	788	1332	719	0	2.9	0
400	50	1.6	914	1160	0	9760	0	5748
400	50	2.4	1406	1159	414	6500	1.7	3828
400	50	1.9	1109	1159	522	3256	2.1	1917
400	50	1.0	538	1164	549	0	2.2	0

Life Expectance

The life expectancy is 40000 hours at rated voltage, ambient temperature of 40-degree centi-grade and continuous operation of the fan at full speed. (According to the actual working conditions of the product, the life

expectancy will be different). The warranty period is subject to the agreement agreed by both parties.

NOTE: Noise is tested for sound pressure level, according to GB/T 2888Fan and Roots Blower Noise Measurement Method, the axis is placed horizontally, and the fan is tested 1 meter away from the air inlet of the fan. The given value is valid under the above condition and may vary according to the actual installation situation.

Technical Features	
Over Current Protection Function	Overcurrent Protection
Power phase loss protection Function	Power phase loss, stop driving output.
Soft Start	The motor starts at low speed and reaches full speed after 30 seconds' running for reducing power supply current surge.
Driving module over-temperature protection function When operates under rising temperature	When the IPM module reaches the first layer of defined temperature, the fan deceleration runs. When the first layer of protection does not reduce the temperature of the IPM module and the IPM mod- ule reaches the second layer of defined temperature, the fan stops running.
Alarm output of relay	Under the situation of input voltage exceeds limit(540±20VAC), under-voltage (280±20VAC), driving module over- temperature, or power open-phase, the common contact of relay is turned from normally close contact to normally open contact
Locked-rotor protecting function	When the fan is blocked, the fan will stop running it will try to start up after each stop. The operator needs to power off the fan and solve the problem.
Auxiliary power output	≤5mA/ Output 10±1VDC, loading current ≤5mA. ≤20mA/ Output 20±2VDC, loading current≤20mA.
On-line communication function	RS485 communication function.

Feedback function of rotary speed 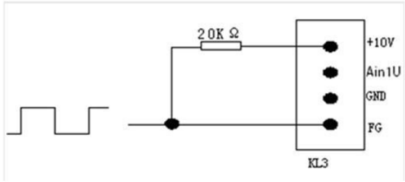 	The FG terminal of the user interface terminal on the control circuit board is pulled up to 10V±0.5V by the external 20K resistor. When the motor is running, the FG terminal outputs a duty cycle of 50% square wave signal. Each revolution of the motor outputs 5 complete outputs of the square wave of the cycle. The wiring diagram is on the left.
Speed control 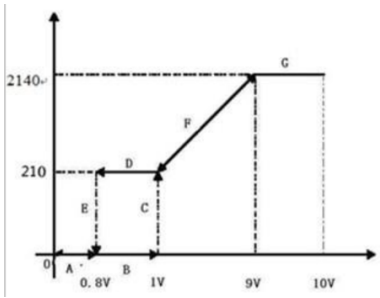 	When the RMS of the minimum control voltage is 1.0±0.2V, the motor starts to run; when the voltage is lower than the minimum control voltage of 0.2V, the fan stops; when the RMS value of the control voltage is 9V~10V, the motor runs at full speed; the maximum control voltage input should be less than 12V to avoid damaging to the controller. The variable speed curve is shown in figure on the left.

Important Instruction – Please Read before operating the Fan

Warning:
Read these instructions carefully before starting work on the device. Observe the following warnings to prevent malfunctions or danger to persons.

DANGER：
Indicates an imminently hazardous situation which will result in death or serious injury if the specified actions are not taken. Compliance with the instructions is imperative.

1) Without protection hands, clothing, and long hair may get stuck in the device, resulting in serious injury during operation. The fan should keep away from the children especially the blade and electric parts. And the children are not allowed to operate the fan alone.

WARNING：
Indicates a potentially hazardous situation which can result in death or serious injury if the specified actions are not taken. Exercise extreme caution while working.

1) The product may slip and fall during installation and disassembly, which may result in fatal or serious injury, property damage, and serious damage to the equipment.
2) The sound pressure level may exceed 70 dB is a risk of noise-induced hearing loss.

CAUTION：
Indicates a potentially hazardous situation which can result in minor or moderate injury or damage to property if the specified actions are not taken.
Cutting and crushing hazard when removing fan from packaging.
NOTE：A potentially harmful situation can occur and, if not avoided, can lead to property damage.

1) Transport the device in its original packaging only. protected against the weather and free from vibration, in the original packaging in a clean environment.
2) When installing at the client, it must meet the mechanical, temperature and service life-related stress requirements that may occur.
3) Before connecting to the device, check whether the information on the nameplate matches the connection data, and make sure the power supply matches the device voltage.
4) Be careful when moving the fan and do not take the blades as a handle because it will cause the distortion and chatter.
5) The length of the mounting screws shall not exceed the requirement, otherwise, the fan will be damaged.
6) Do not disassemble the fan arbitrarily. It may hurt the capacity of watertightness and dynamic balance or cause other serious problems.
7) The fan with inlet ring should be installed follow the requirements or it will affect the performance.
8) Users should use the standard cable when install the fan otherwise it will affect the watertightness.

Important Instruction – Please Read before operating the Fan

DANGER:
Electrically Charged Device, Risk of Electric Shock.

WARNING:
Live Terminals and connection even with device switched OFF.

Risk of Electric Shock:
CAUTION:
When a fault occurs, power on the motor or Fan or after a power failure, if the device is set with a control voltage or stored speed value, the motor will automatically restart, there is a risk of injury.

CAUTION:
High temperature on electronic housing risk of burns.

1) Wiring depends on the wiring diagram and please connect the earth ground if required. We don't suggest using of extension cord. Any wrong connection may cause the damage of the fan.
2) Connect the thermostat if required otherwise it would damage the motor because of the over temperature overcurrent.
3) The overcurrent protector is necessary.

Why GarvataAI EC fan:

GarvataAI fans are IoT enabled, high performance AI Fans with capablity of delivering wealth of data to advanced building systems including rpm, vibration, noise, air, speed, volume, pressure and most importantly quality of the air flow.
Our backward centrifugal AI EC fans are popular choice of today's modernized and complex air handling application. Due to its energy efficiency and simple design, GarvataAI fan can replace traditional fans that can save lot on operational cost.

Features:

- Fully Automated
- 40% Energy Efficient
- Durable and Versatile
- Maintenance Free Operation

Additional Benefit with GarvataAI Fans

- Fully AI enabled.
- Controls dampers & actuators based on feedback.
- Dual loop control
- Cloud based control & set point variations as per requirement.
- Cloud based dashboard.

- Local service support

Advantages:

- Providing integration on the motor, control, and backward curved blade.
- Compatible mounting for easier replacement.
- Giving variable of safety protection and reducing risks of over-heat and sparks.
- Powered by high-voltage-driven technology to reduce transmission loss.
- The built-in controller can relate to IoT by different control method.
- Easily applied to ventilation system, air purifier, exhaust fan, AHU's